# SPEEDY RJ45

ROHS Compliant

**Code: TRCSPDY**

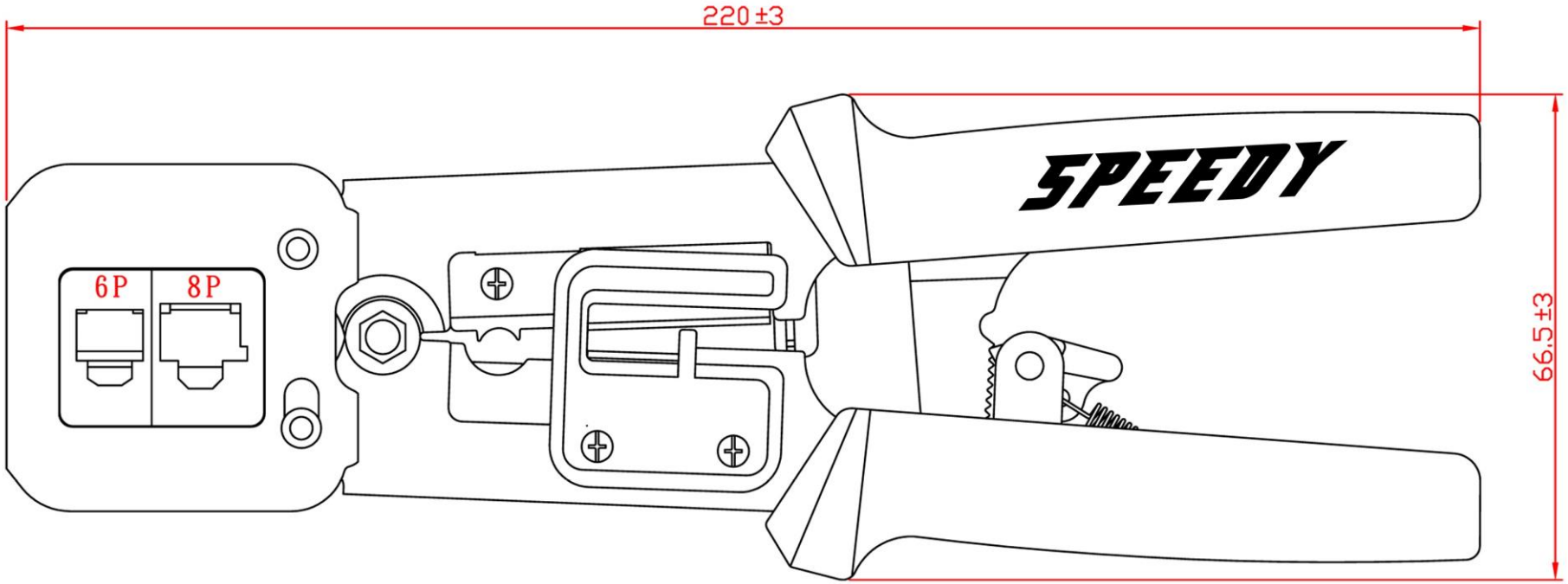


05/10/2017